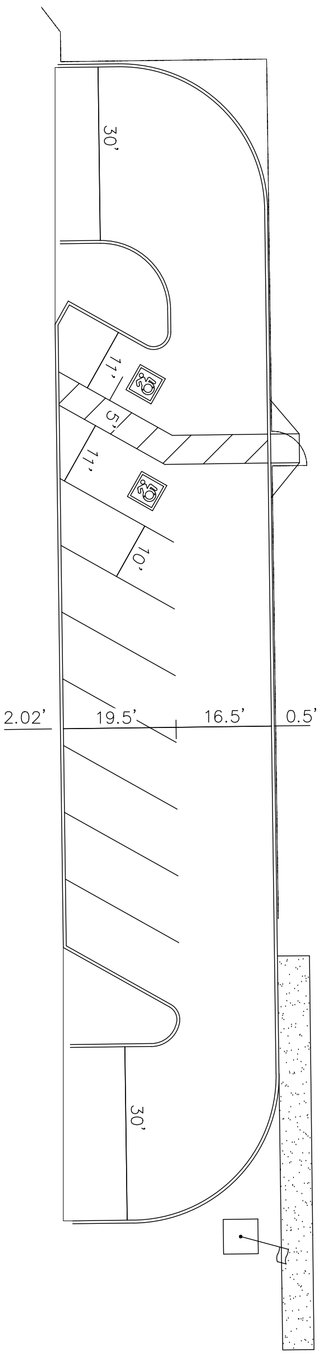
30'
11'
5'
11'
10'
2.02'
19.5'
16.5'
0.5'
30'